ALPHA1 L

Circulator pumps

50/60 Hz

be
think
innovate

GRUNDFOS

Table of contents

1. Product introduction

ALPHA1 L 180

Product description

ALPHA1 L can be used as stand-alone or integrated circulator pump in existing systems as replacement or in new heating systems with either variable or constant flow rate.

The speed can be controlled by a low-voltage PWM (Pulse Width Modulation) signal.

High-efficiency ECM (Electronically Commutated Motor) pumps, such as ALPHA1 L, must not be speed-controlled by an external speed controller varying or pulsing the supply voltage.

Features and benefits

- Three constant-curves/constant-speed curves.
- Radiator heating mode.
- Underfloor heating mode.
- Speed control via a low-voltage PWM (Pulse Width Modulation) signal profile A (heating). The PWM signal is a method for generating an analog signal using a digital source.
- Low EEI (Energy Efficiency Index).
- Deblocking device.
- Maintenance-free.
- Low noise level.
- Very simple installation.

Type key

Example	ALPHA1 L	25 - 40	180
Pump range			
Nominal diameter (DN) of inlet and outlet ports [mm]			
Maximum head [dm]			
[ ]: Cast-iron pump housing N: Stainless-steel pump housing			
Port-to-port length [mm]			

System applications

ALPHA1 L is designed for circulating liquids in heating systems.

The pumps are suitable for the following systems:

- Systems with constant or variable flows where it is desirable to optimise the pump duty point.
- Installation in existing systems where the differential pressure of the pump is too high during periods of reduced flow demand.
- Installation in new systems for automatic adjustment of the performance to flow demands without the use of bypass valves or similar expensive components.

Examples of systems

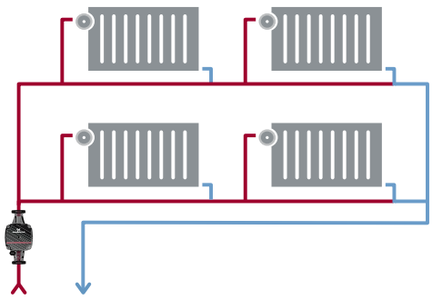

TM06 8530 1117

Fig. 1 One-pipe heating system

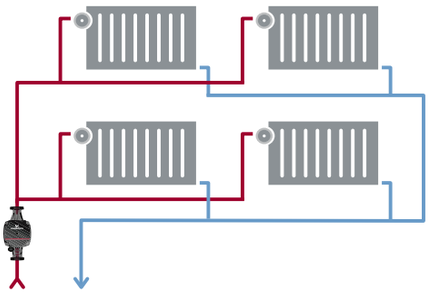

TM06 8529 1117

Fig. 2 Two-pipe heating system

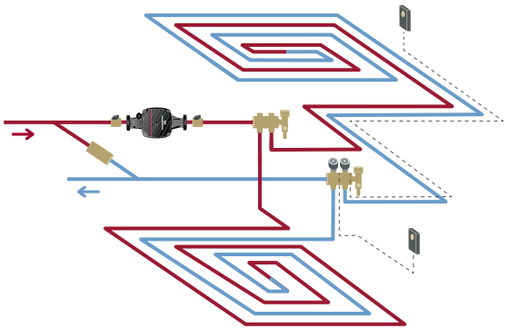

TM06 8528 1117

Fig. 3 Underfloor heating system

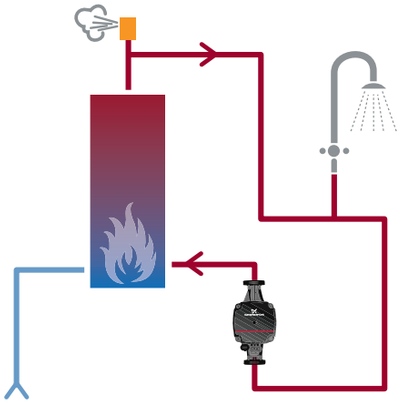

TM06 8531 1117

Fig. 4 Domestic hot-water recirculation system

ALPHA1 L performance range

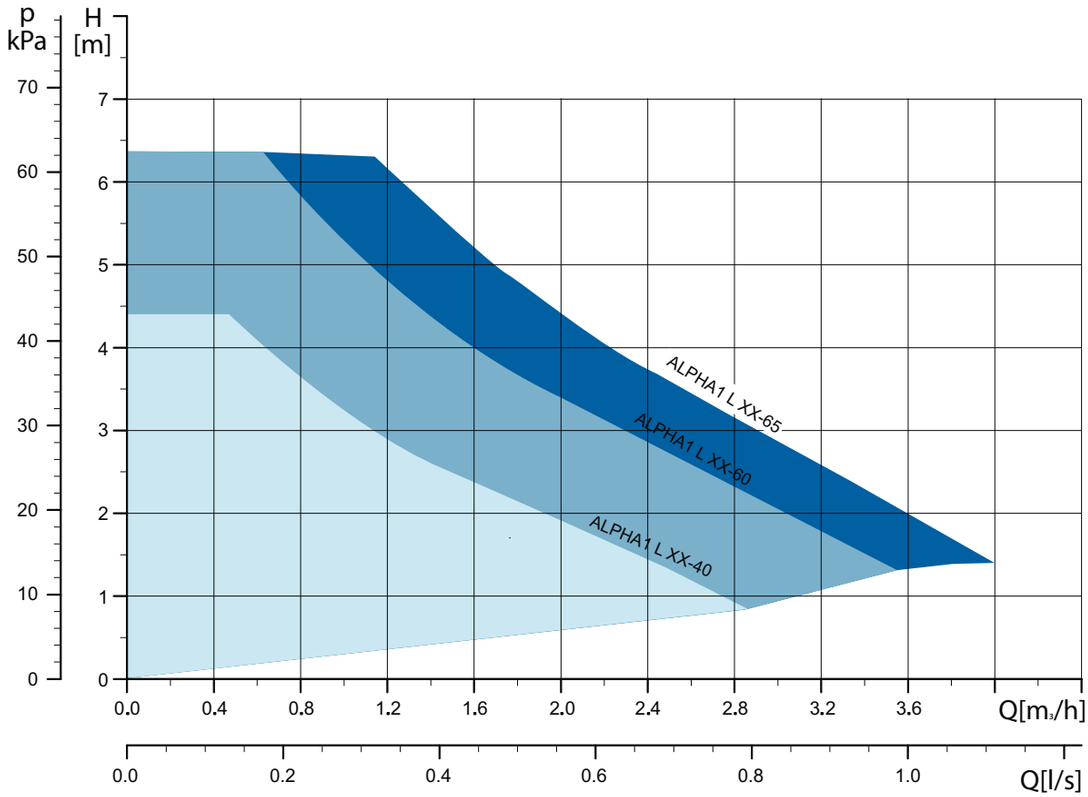

TM07 1306 1218

2. Construction

ALPHA1 L is designed for long and trouble-free operation, that is pump and motor form an integral unit without shaft seal and with gaskets for sealing. The bearings are lubricated by the pumped liquid. These constructions ensure maintenance-free operation.

The pump is characterised by the following:

- permanent-magnet/compact-stator motor which contributes to high efficiency and high starting torque
- ceramic shaft and radial bearings which contribute to long life
- carbon thrust bearing which contribute to long life
- stainless-steel rotor can, bearing plate and rotor cladding which contribute to corrosion-free long life
- composite impeller which contributes to corrosion-free long life
- stainless-steel or cast-iron pump housing which contributes to flexibility
- the pump is self-venting through the system for easy startup
- compact design featuring pump head with integrated power supply operating panel which fit into most common installations.

Stainless-steel versions N

The pump housing of the stainless-steel versions is in stainless steel. The stainless-steel versions can be identified by the N in the type key or by the silver pump housing. See fig. 5.

TM06 4428 2215

Fig. 5 Stainless-steel version N

Exploded view and sectional view

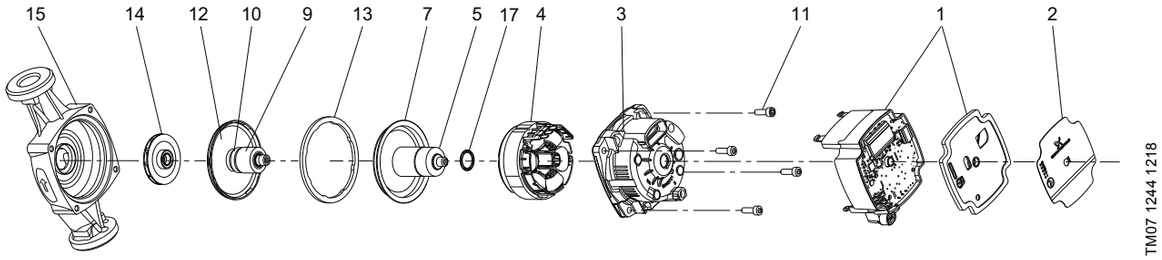

Fig. 6 ALPHA1 L exploded view

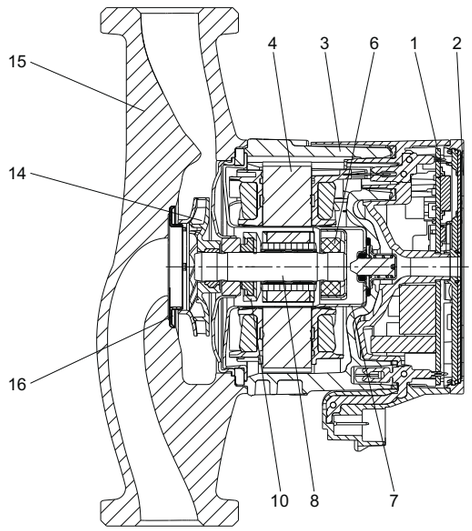

Fig. 7 ALPHA1 L sectional view

Material specification

Pos.	Component	Material	EN/DIN
1	Control box	Composite PC-GF10 FR	
	Control electronics	PCB with SMD components	
	Control box heat sink	Aluminium	
2	Front foil	LEXAN 8A13F	
3	Stator housing	Aluminium, silumin	
4	Stator	Copper wire	
	Stator lamination	Laminated iron	
5	Push deblocking device		
	Plunger	Stainless steel	1.4404
	Spring	Stainless steel	1.4310
	Housing for spring	Stainless steel	1.4401
	Guide disc	Stainless steel	1.4401
	Housing for sealing	Stainless steel	1.4401
	Sealing	EPDM	

Pos.	Component	Material	EN/DIN
6	Radial bearing	Ceramics	
7	Rotor can	Stainless steel	1.4401
8	Shaft	Ceramics	
9	Rotor	NdFeB	
	Rotor tube	Stainless steel	1.4521
	Rotor cladding	Stainless steel	1.4401/ 1.4301
	Bush	Stainless steel	1.4301
10	Thrust bearing	Carbon	
	Thrust bearing retainer	EPDM	
11	Screws	Steel, eco-lubric coated	
12	Bearing plate	Stainless steel	1.4301
13	Gasket	EPDM	
14	Impeller	Composite/PES 30 % GF	
15	Pump housing	Cast iron GG15	EN-GJL-150
		Stainless steel	1.4308
16	Neck ring	Stainless steel	1.4301
17	O-ring	EPDM	

3. Operating conditions

Pumped liquids

The pump is suitable for clean, thin, non-aggressive and non-explosive liquids, not containing solid particles, fibres or mineral oil.

The pump must not be used for the transfer of flammable liquids, such as diesel oil, petrol and similar liquids.

In heating systems, the water must meet the requirements of accepted standards on water quality in heating systems, for example the German standard VDI 2035.

- Maximum water/propylene glycol mixture is 50 %
- Max. 10 mm^2/s viscosity

Note: The water/propylene glycol mixture reduces the performance due to higher viscosity.

Technical data

Liquid temperature

The liquid temperature must be 2-95 °C.

To avoid condensation in the stator, the liquid temperature must always be higher than the ambient temperature.

Ambient temperature

The ambient temperature must be 0-55 °C.

System pressure

PN 10: Maximum 1.0 MPa (10 bar).

Inlet pressure

To avoid cavitation noise and damage to the pump, the following minimum pressures are required at the pump inlet port.

Liquid temperature	75 °C	95 °C
Pressure	0.005 MPa	0.05 MPa
	0.05 bar	0.5 bar

Electrical data

Supply voltage	1 x 230 V - 15 %/+ 10 %, 50/60 Hz, PE
Motor protection	The pump requires no external motor protection.
Enclosure class	IPX4D
Insulation class	F
Standby power consumption	< 0.3 W

Additional protection

If national legislation requires a Residual Current Device (RCD) or equivalent in the electrical installation, or if the pump is connected to an electric installation where a RCD is used as an additional protection, this must be type A or better, due to the nature of the pulsating DC leakage current. The RCD must be marked with the symbol shown below:

Miscellaneous data

Relative humidity	Maximum 95 % (non-condensing environment)
Maximum altitude of installation	2000 m above sea level

4. Installation and startup

Mechanical installation

In most cases, the installation of ALPHA1 L is reduced to the mechanical installation and the connection to the power supply.

The pump must always be installed with horizontal motor shaft.

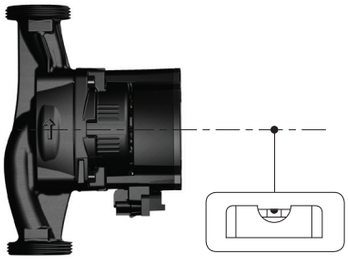

TM06 7287 0918

Fig. 8 Horizontal motor shaft

Power supply positions

The circulator pump control box can be mounted in all positions.

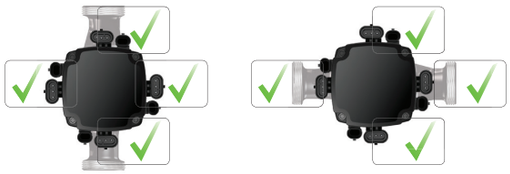

TM06 7297 0918

Fig. 9 Possible control box positions

Power supply connection

The circulator pump must be connected to the power supply with the installer plug. See figs 10 and 11.

TM06 7298 0918

Fig. 10 Installer plug

TM06 7635 0918

Fig. 11 Installer plug in pump

Startup

The pump must not be started until the system has been filled with liquid and vented. Furthermore, the required minimum inlet pressure must be available at the pump inlet. The system cannot be vented through the pump.

5. Operating the product

Operating panel and display

The operating panel is designed with a single button, one red/green LED and four yellow LEDs.

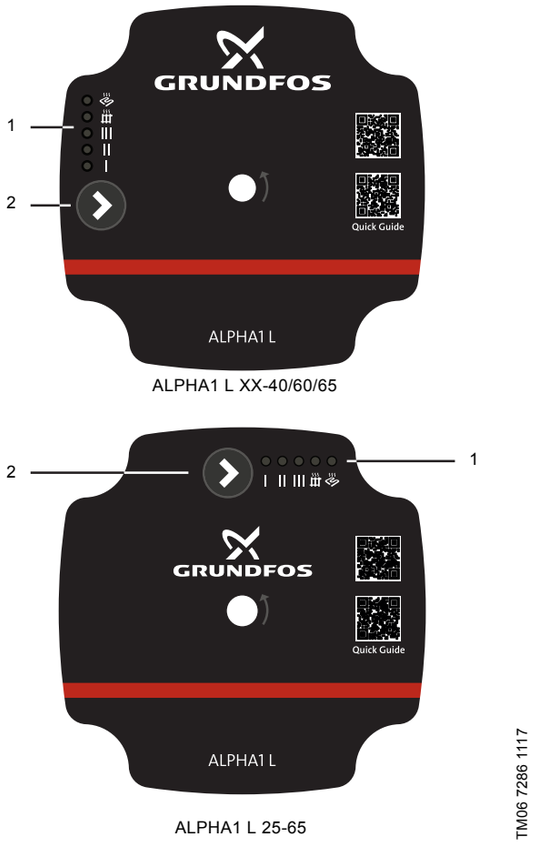

Fig. 12 Operating panel with one button and five LEDs

Pos.	Description
1	LEDs showing: • Settings view, after pressing the button • Alarm or warning
2	Button for setting the product.

Alarm or warning

If the circulator pump has detected one or more alarms or warnings, the first LED switches from green to red. When an alarm is active, the LEDs indicate the type of alarm or warning.

Operating panel	Alarm or warning
	Alarm: The pump stops. The pump is blocked.
	Warning: The pump keeps running. The supply voltage is low.
	Alarm: The pump stops. Electrical error (the pump stops).

Fig. 13 LEDs on the operating panel showing the alarm or warning

Setting the pump

Using the button on the operating panel, the electronically controlled pump can be set to three constant-speed curves, radiator heating mode, or underfloor heating mode.

The PWM profile A input-signal control mode is enabled when the signal cable is plugged in and a signal is detected. Fixed proportional-pressure mode is selected by pressing and holding the button for three seconds.

Operating panel	Control mode
	Constant curve I
	Constant curve II
	Constant curve III
	Radiator heating mode
	Underfloor heating mode
	PWM profile A
	Fixed proportional-pressure curve

Fig. 14 LEDs on the operating panel showing the control mode

6. Control modes

Application	Control mode
Floor heating	Underfloor heating mode
Two-pipe system	Radiator heating mode
Ventilation	Speed I, II or III
Boiler-shunt	
One-pipe system	
Boiler (integrated)	
Domestic hot water	

Radiator heating mode

The radiator heating mode adjusts the pump's performance to the actual heat demand in the system following a proportional-pressure curve. See fig. 15 and *Overview of pump performance* on page 12 for further information.

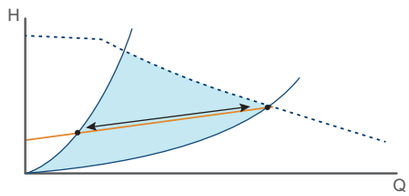

TM06 8815 1217

Fig. 15 Proportional-pressure curve

Underfloor heating mode

The underfloor heating mode adjusts the pump's performance to the actual heat demand in the system following a constant-pressure curve. See fig. 16 and *Overview of pump performance* on page 12 for further information.

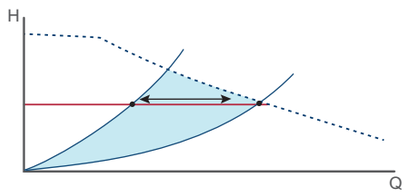

TM06 8816 1217

Fig. 16 Constant-pressure curve

Constant curve/constant speed control

At constant curve/constant speed operation, the pump runs at a constant speed, independent of the actual flow demand in the system. The pump performance follows the selected performance curve I, II or III. See fig. 17 where II has been selected. See *Overview of pump performance* on page 12 for further information.

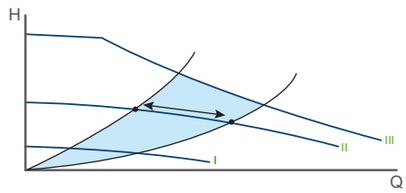

TM06 8822 1217

Fig. 17 Three constant-curve/constant-speed settings

The selection of the right constant-curve/constant-speed setting depends on the characteristics of the heating system in question and the number of taps likely to be opened at the same time.

Overview of pump performance

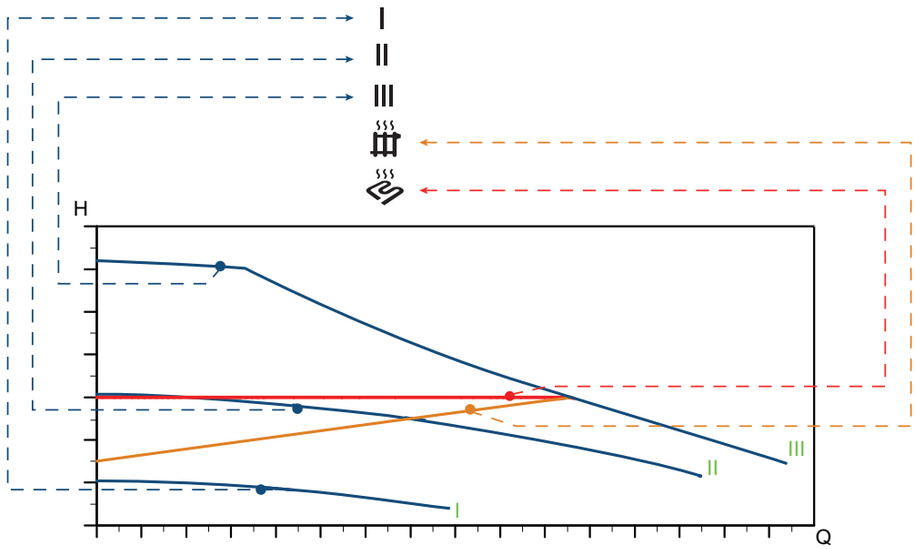

Fig. 18 Pump setting in relation to performance

Setting	Pump curve	Function
	Proportional-pressure curve	The duty point of the pump will move up or down on a proportional-pressure curve, depending on the heat demand in the system. The head (pressure) is reduced at falling heat demand and increased at rising heat demand.
	Constant-pressure curve	The duty point of the pump will move out or in the constant-pressure curve, depending on the heat demand in the system. The head (pressure) is kept constant, irrespective of the heat demand.
III	Speed III	The pump runs at a constant speed and consequently on a constant curve. At speed III, the pump is set to run on the maximum curve under all operating conditions. Quick venting of the pump can be obtained by setting the pump to speed III for a short period.
II	Speed II	The pump runs at a constant speed and consequently on a constant curve. At speed II, the pump is set to run on the intermediate curve under all operating conditions.
I	Speed I	The pump runs at a constant speed and consequently on a constant curve. At speed I, the pump is set to run on the minimum curve under all operating conditions.

Control signal

The pump can be controlled via a digital low-voltage pulse-width modulation (PWM) signal.

The square-wave PWM signal is designed for a 100 to 4,000 Hz frequency range. The PWM signal is used to select the speed (speed command) and as feedback signal. The PWM frequency on the feedback signal is fixed at 75 Hz in the pump.

For instructions on how to set the connection, see *Setting the pump*, page 10.

Duty cycle

d % = 100 x t/T

Example	Rating
T = 2 ms (500 Hz)	U_{iH} = 4-24 V
t = 0.6 ms	U_{iL} ≤ 1 V
d % = 100 x 0.6 / 2 = 30 %	I_{iH} ≤ 10 mA (depending on U_{iH})

Example

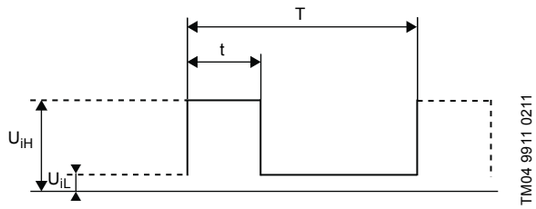

Fig. 19 PWM signal

Abbreviation	Description
T	Period of time [sec.]
d	Duty cycle [t/T]
U_{iH}	High-level input voltage
U_{iL}	Low-level input voltage
I_{iH}	High-level input current

Interface

The pump's interface consists of an electronic part connecting the external control signal to the pump. The interface translates the external signal into a signal type that the microprocessor can understand.

In addition, the interface ensures that the user cannot get into contact with dangerous voltage if touching the signal wires when power is connected to the pump.

Note: "Signal ref." is a signal reference with no connection to protective earth.

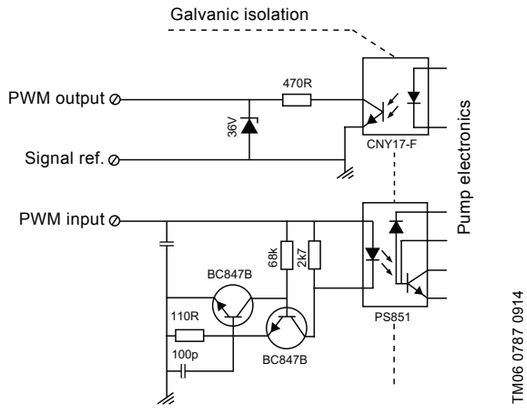

Fig. 20 Schematic drawing, interface

PWM input signal profile A (heating)

The pump runs on constant speed curves depending on the PWM input signal.

At high PWM signal percentages (duty cycles), a hysteresis prevents the pump from starting and stopping if the input signal fluctuates around the shifting point. At low PWM signal percentages, the pump speed is high for safety reasons. If no PWM signal is available, you can set ALPHA1 L to radiator heating mode, underfloor heating mode or constant speed, by the operating panel.

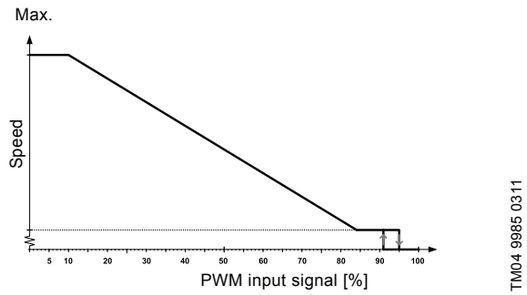

Fig. 21 PWM input profile A (Heating)

PWM input signal [%]	Pump status
≤ 10	Maximum speed: max.
> 10 / ≤ 84	Variable speed: min. to max.
> 84 / ≤ 91	Minimum speed: min.
> 91/95	Hysteresis area: on/off
> 95 / ≤ 100	Standby mode: off

PWM feedback signal

The PWM feedback signal offers pump information like in BUS systems:

- current power consumption (accuracy ± 2 % of PWM signal)
- warning
- alarm.

Alarms

Alarm output signals are available because some PWM output signals are dedicated to alarm information. If a supply voltage is measured below the specified supply voltage range, the output signal is set to 75 %. If the rotor is locked due to deposits in the hydraulics, the output signal is set to 90 % because this alarm has a higher priority. See fig. 22.

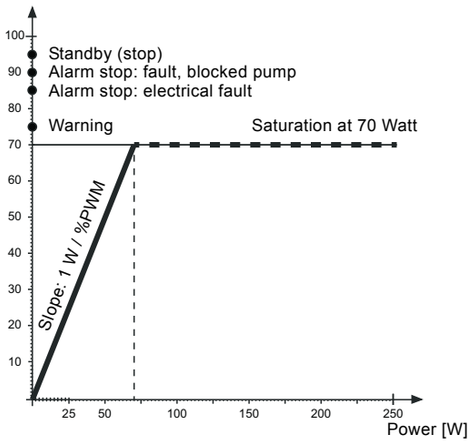

Fig. 22 PWM feedback signal - power consumption

Data

Maximum rating	Symbol	Value
PWM frequency input with high-speed optocoupler	f	100-4000 Hz
Guaranteed standby power consumption		< 1 W
Rated input voltage - high level	U_{iH}	4-24 V
Rated input voltage - low level	U_{iL}	< 1 V
High-level input current	I_{iH}	< 10 mA
Input duty cycle	PWM	0-100 %
PWM frequency output, open collector	f	75 Hz ± 5 %
Accuracy of output signal regarding power consumption	-	± 2 % (of PWM signal)
Output duty cycle	PWM	0-100 %
Collector emitter breakdown voltage on output transistor	U_c	< 70 V
Collector current on output transistor	I_c	< 50 mA
Maximum power dissipation on output resistor	P_R	125 mW
Zener diode working voltage	U_z	36 V
Maximum power dissipation in Zener diode	P_z	300 mW

Advantages of pump control

In ALPHA1 L, control is effected by adapting the differential pressure to the flow (proportional- and constant-pressure control).

Contrary to an uncontrolled pump, the proportional-pressure-controlled ALPHA1 L pump reduces the differential pressure in case of falling heating demand.

If the heating demand falls, for instance due to solar radiation, the radiator valves will close, and, for the uncontrolled pump, the flow resistance of the system will rise for instance from A_1 to A_2.

In a heating system with an uncontrolled pump, this situation will cause a pressure rise in the system by ΔH_1.

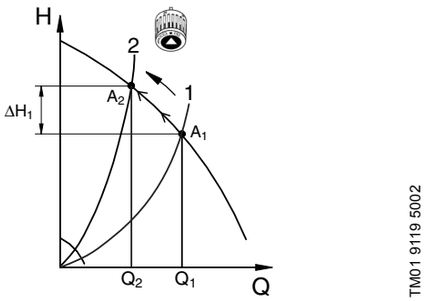

Fig. 23 Uncontrolled pump

In a system with a ALPHA1 L pump which is set to radiator heating mode, the pressure will be reduced by ΔH_2.

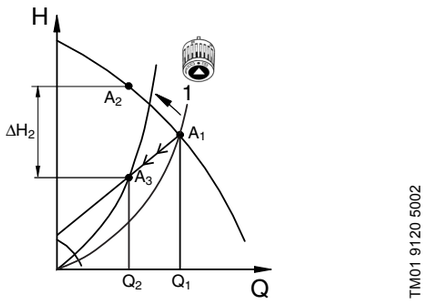

Fig. 24 Pump in proportional-pressure control mode

In a system with an uncontrolled pump, a pressure rise will often cause flow-generated noise in the thermostatic valves. This noise will be reduced considerably with ALPHA1 L.

7. Guide to performance curves

Each pump has its own performance curve.

A power curve, P1, belongs to each performance curve. The power curve shows the pump power consumption in watt at a given performance.

Energy labelling

ALPHA1 L is energy-optimised and complies with the ErP Directive, Commission Regulation (EC) No 641/2009 and Commission Regulation (EU) No 622/2012, which have been effective as of 1 January 2013.

Curve conditions

The guidelines below apply to the performance curves on the following pages:

- Test liquid: airless water.
- The curves apply to a density of ρ = 983.2 kg/m^3 and a liquid temperature of 60 °C.
- All curves show average values and should not be used as guarantee curves. If a specific minimum performance is required, individual measurements must be made.
- The curves for speeds I, II and III are marked.
- The curves apply to a kinematic viscosity of υ = 0.474 mm^2/s (0.474 cSt).
- EEI obtained according to EN 16297 part 3.

The pump is energy-optimised and complies with the EuP Directive, Commission Regulation (EC) No 641/2009 and 622/2012, which has been effective as from 1 January 2013.

For ALPHA1 L pumps, the energy efficiency index (EEI) is ≤ 0.20.

Figure 25 shows the energy efficiency index for an ALPHA1 L pump compared to the various EEI limits.

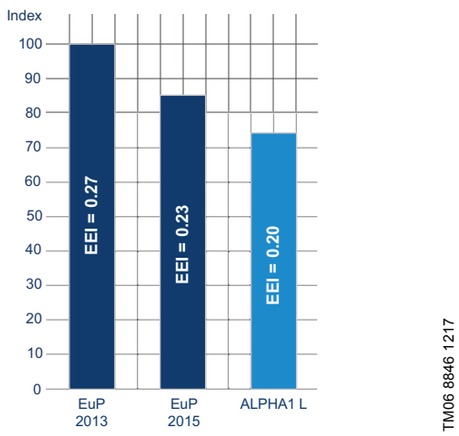

Fig. 25 EEI limits and the current positioning of the ALPHA1 L

With an energy efficiency index (EEI) below the EuP 2015 requirement level, you can achieve considerable energy savings compared to a typical circulator pump and thus a remarkably fast return on investment.

8. Performance curves and technical data

ALPHA1 L xx-40

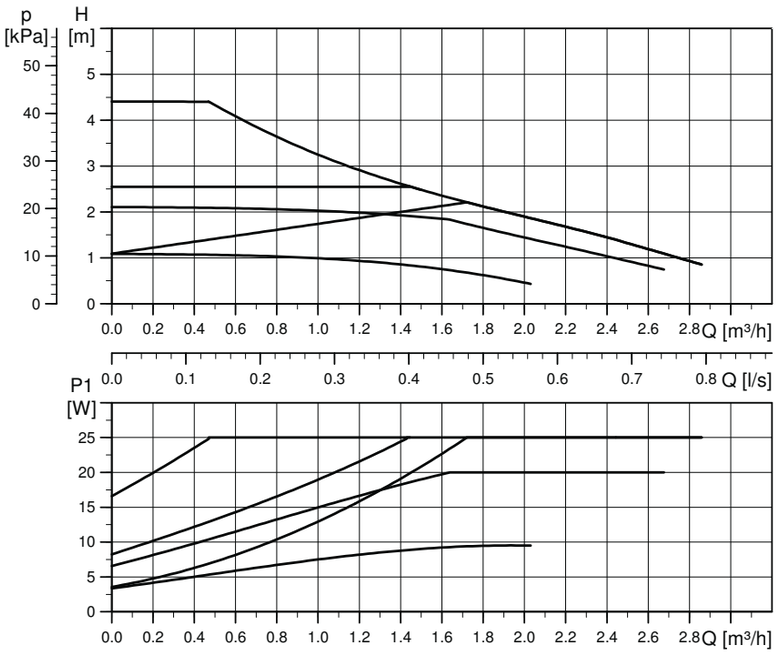

TM07 0797 1117

Speed	P1 [W]	I_1 [A]
Min.	4	0.05
Max.	25	0.26

The pump incorporates overload protection.

Liquid temperature: 2-95 °C (TF 95).

System pressure: Maximum 1.0 MPa (10 bar).

Specific EEI: ≤ 0.20

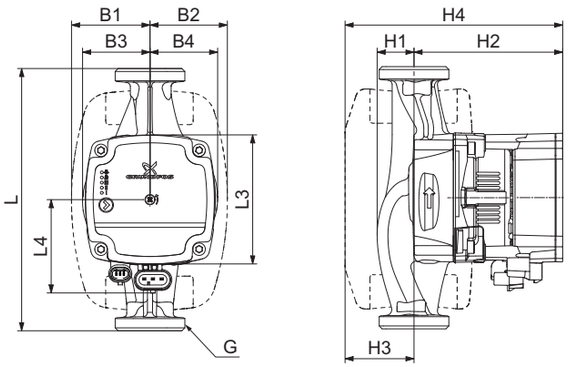

TM07 1242 1218

Pump type	Dimensions [mm]												Weights [kg]		Ship. vol. [m³]
	L	L3	L4	B1	B2	B3	B4	H1	H2	H3	H4	G	Net	Gross	
ALPHA1 L 15-40	130	88	64	54	54	46	47	25	102	47	149	G 1	1.9	2.1	0.004
ALPHA1 L 20-40	130	88	64	54	54	46	47	25	102	47	149	G 1 1/4	1.9	2.1	0.004
ALPHA1 L 20-40 N	150	90	64	54	54	49	49	27	102	47	149	G 1 1/4	2.4	2.6	0.004
ALPHA1 L 25-40	130	88	64	54	54	46	47	25	102	47	149	G 1 1/2	2.1	2.4	0.004
ALPHA1 L 25-40	180	88	64	54	54	46	46	25	102	47	149	G 1 1/2	2.2	2.5	0.004
ALPHA1 L 25-40 N	180	90	64	54	54	49	49	27	102	47	149	G 1 1/2	2.5	2.8	0.004
ALPHA1 L 32-40	180	88	64	54	54	46	48	26	102	47	149	G 2	2.3	2.6	0.004

ALPHA1 L xx-60

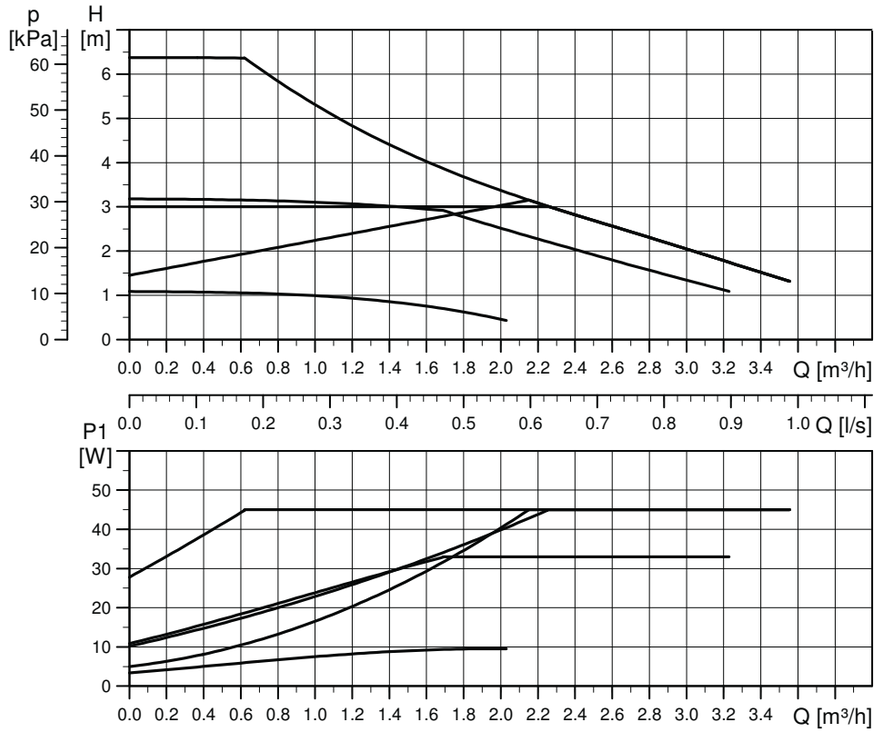

TM07 0798 1118

Speed	P1 [W]	I_1 [A]
Min.	4	0.05
Max.	45	0.42

The pump incorporates overload protection.

Liquid temperature: 2-95 °C (TF 95).

System pressure: Maximum 1.0 MPa (10 bar).

Specific EEI: ≤ 0.20

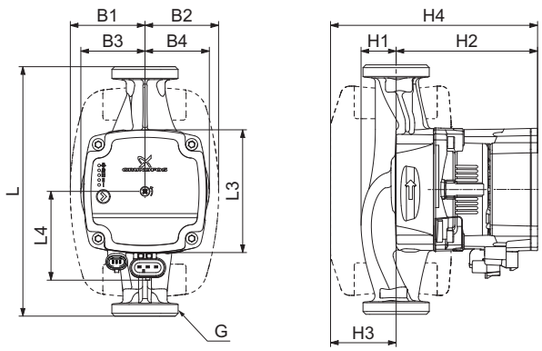

TM07 1242 1218

Pump type	Dimensions [mm]												Weights [kg]		Ship. vol. [m³]
	L	L3	L4	B1	B2	B3	B4	H1	H2	H3	H4	G	Net	Gross	
ALPHA1 L 15-60	130	88	64	54	54	46	47	25	102	47	149	G 1	1.9	2.1	0.004
ALPHA1 L 20-60	130	88	64	54	54	46	47	25	102	47	149	G 1 1/4	1.9	2.1	0.004
ALPHA1 L 20-60 N	150	90	64	54	54	49	49	27	102	47	149	G 1 1/4	2.4	2.6	0.004
ALPHA1 L 25-60	130	88	64	54	54	46	47	25	102	47	149	G 1 1/2	2.1	2.4	0.004
ALPHA1 L 25-60	180	88	64	54	54	46	46	25	102	47	149	G 1 1/2	2.2	2.5	0.004
ALPHA1 L 25-60 N	180	90	64	54	54	49	49	27	102	47	149	G 1 1/2	2.5	2.8	0.004
ALPHA1 L 32-60	180	88	64	54	54	46	48	26	102	47	149	G 2	2.4	2.6	0.004

ALPHA1 L xx-65

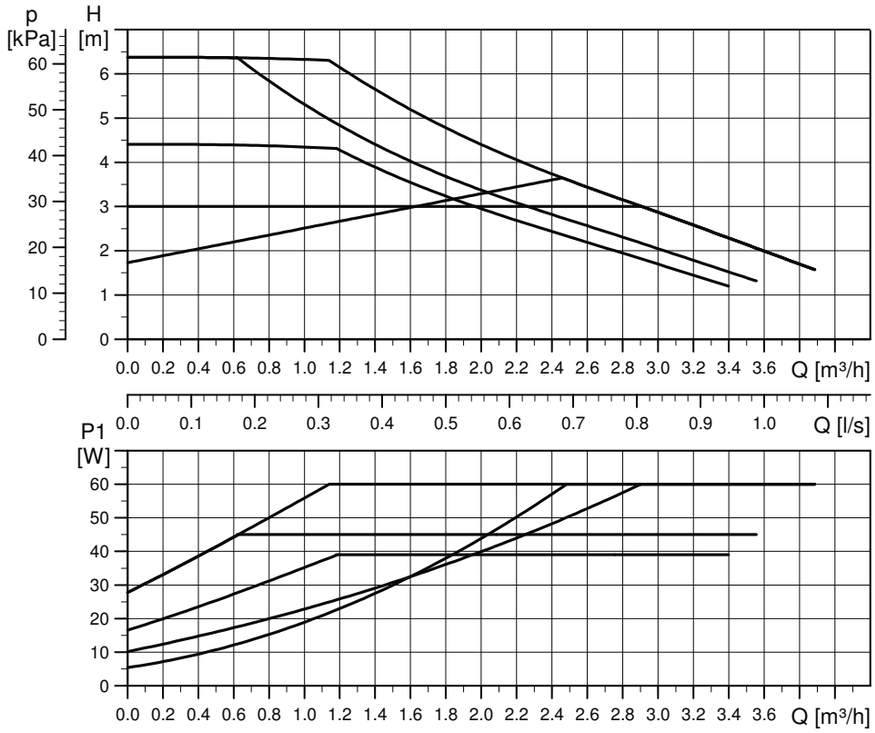

TM07 0799 1118

Speed	P1 [W]	I_1 [A]
Min.	4	0.05
Max.	60	0.52

The pump incorporates overload protection.

Liquid temperature: 2-95 °C (TF 95).

System pressure: Maximum 1.0 MPa (10 bar).

Specific EEI: ≤ 0.20

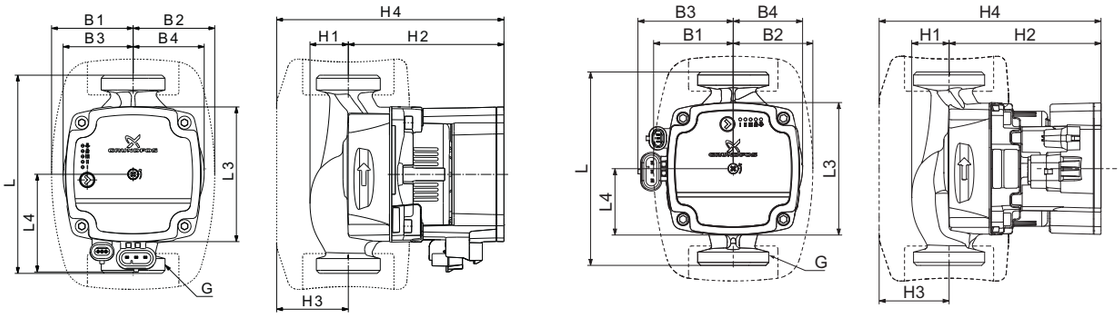

TM07 1242 1118 - TM07 1316 1318

Fig. 26 Left: ALPHA1 L 15-65, right: ALPHA1 L 25-65

Pump type	Dimensions [mm]												Weights [kg]		Ship. vol. [m³]
	L	L3	L4	B1	B2	B3	B4	H1	H2	H3	H4	G	Net	Gross	
ALPHA1 L 15-65	130	88	64	54	54	46	47	25	102	47	149	G 1	1.9	2.1	0.004
ALPHA1 L 25-65	130	89	45	54	54	72	47	25	102	47	149	G 1 1/2	2.0	2.2	0.004

9. Accessories

Unions and valve kits

Product numbers, unions																
ALPHAx	Connection	Rp			R		Rp			mm		mm				
		3/4	1	1 1/4	1	1 1/4	3/4	1	1 1/4	∅22	∅28	∅15	∅18	∅22	∅28	∅42
25-xx	G 1 1/2	529921	529922	529821	529925	529924										
25-xx N	G 1 1/2	529971	529972				519805	519806	519807	519808	519809		529977	529978	529979	
32-xx	G 2		509921	509922												

G-threads have a cylindrical form in accordance with the EN ISO 228-1 standard and are not sealing the thread. It requires a flat gasket. You can only screw male G-threads (cylindrical) into female G-threads. The G-threads are standard thread on the pump housing.

R-threads are tapered external threads in accordance with the EN z0226-1 standard.

Rc- or Rp-threads are internal threads with either tapered or cylindrical (parallel) threads. You can screw male R-threads (conical) into female Rc- or Rp-threads. See fig. 27.

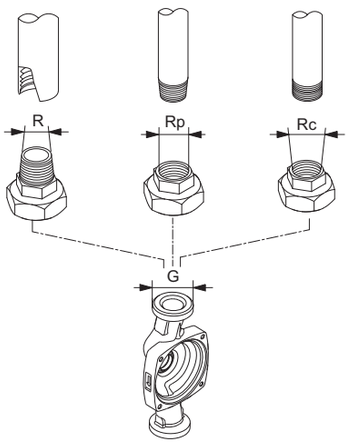

TM06 7632 3616

Fig. 27 G-threads and R-threads

Insulating shells

The insulating shells, which are tailored to the individual pump type, can be ordered as accessories. It is easy to fit the insulating shells around the pump.

Pump type	Product number
ALPHA1 L XX-XX (N)	99270706

Control box connections

The ALPHA1 L control box has two electrical connections on one side: the power supply and signal connection.

Power supply connection

The installer plug is supplied with the pump and is available as an accessory.

Power cable adapters are also available as accessories.

Control signal connection

The control signal cable connection has three leads: signal input, signal output and signal reference. Connect the cable to the control box by a mini superseal plug, which can be supplied with the pump as an accessory.

TM06 58210216

Fig. 28 Mini superseal plug

Cables and plugs

Product	Product description	Length [mm]	Product number
	Installer plug		99439948
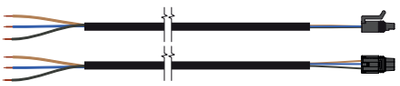	Mini superseal signal cable (PWM input signal)	2000	99165309
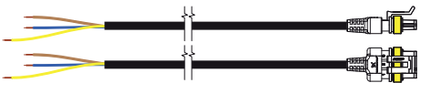	Superseal power cable	2000	99198990
	Power cable adapter: Superseal Molex cable adapter, overmoulded	150	99165311
	Power cable adapter: Superseal Volex cable adapter, overmoulded	150	99165312

10. Product numbers

Note: Click on the relevant product number, and go directly to the performance curve in Grundfos Product Center (GPC).

International market

Pump type	Product number	Data sheet Page
ALPHA1 L 15-40 130	99160550	16
ALPHA1 L 15-60 130	99160574	17
ALPHA1 L 15-65 130	99165123	18
ALPHA1 L 20-40 130	99160575	16
ALPHA1 L 20-60 130	99160577	17
ALPHA1 L 25-40 130	99160578	16
ALPHA1 L 25-40 180	99160579	16
ALPHA1 L 25-60 130	99160583	17
ALPHA1 L 25-60 180	99160584	17
ALPHA1 L 32-40 180	99160587	16
ALPHA1 L 32-60 180	99160590	17
Stainless-steel versions		
ALPHA1 L 20-40 150 N	99160595	16
ALPHA1 L 20-60 150 N	99160598	17
ALPHA1 L 25-40 180 N	99160592	16
ALPHA1 L 25-60 180 N	99160594	17

Irish market

Pump type	Product number	Data sheet Page
ALPHA1 L 25-65 130	99199582	18

EAC market

Pump type	Product number	Data sheet Page
ALPHA1 L 25-40* 180	99199611	16
ALPHA1 L 25-60* 180	99199612	17
ALPHA1 L 32-40 180	99199613	16
ALPHA1 L 32-60 180	99199614	17

* 25-xx: Including union kit Rp 1"

11. Grundfos Product Center

Online search and sizing tool to help you make the right choice.

http://product-selection.grundfos.com

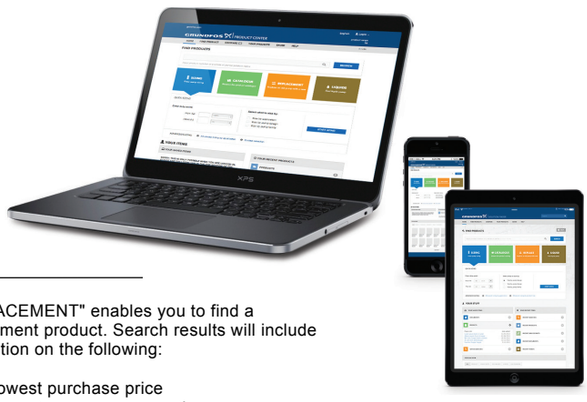

"SIZING" enables you to size a pump based on entered data and selection choices.

"REPLACEMENT" enables you to find a replacement product. Search results will include information on the following:

- the lowest purchase price
- the lowest energy consumption
- the lowest total life cycle cost.

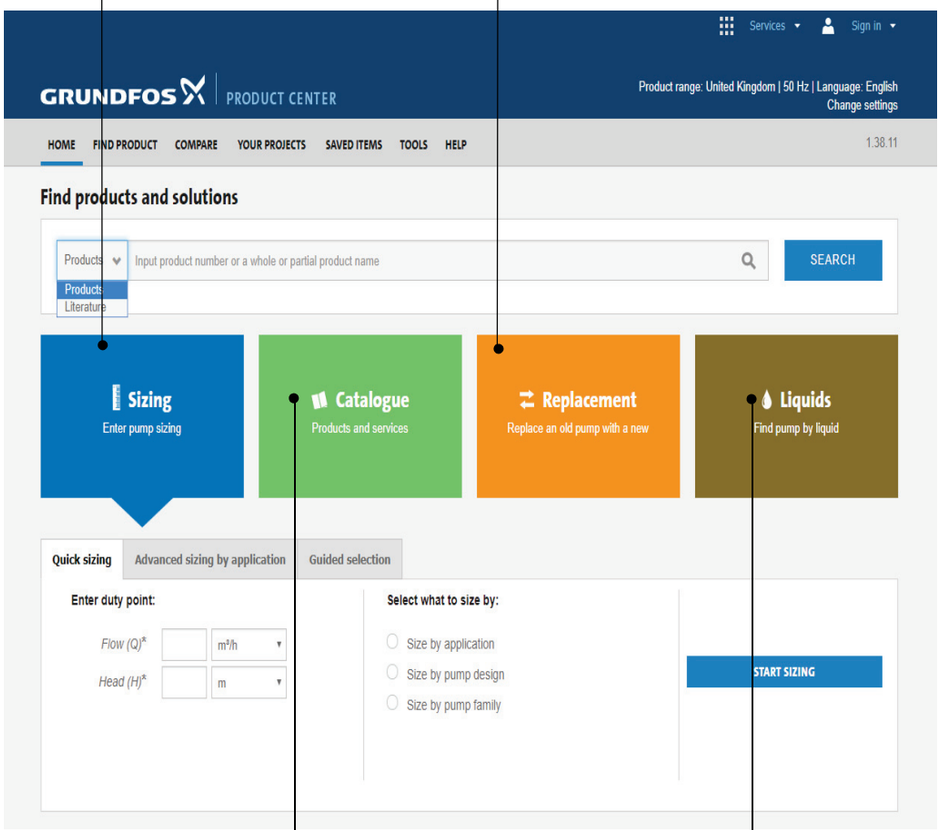

"CATALOGUE" gives you access to the Grundfos product catalogue.

"LIQUIDS" enables you to find pumps designed for aggressive, flammable or other special liquids.

All the information you need in one place

Performance curves, technical specifications, pictures, dimensional drawings, motor curves, wiring diagrams, spare parts, service kits, 3D drawings, documents, system parts. The Product Center displays any recent and saved items - including complete projects - right on the main page.

Downloads

On the product pages, you can download installation and operating instructions, data booklets, service instructions, etc. in PDF format.

be think innovate

99169580 0219

ECM: 1253340

GRUNDFOS A/S
DK-8850 Bjerringbro . Denmark
Telephone: +45 87 50 14 00
www.grundfos.com

GRUNDFOS